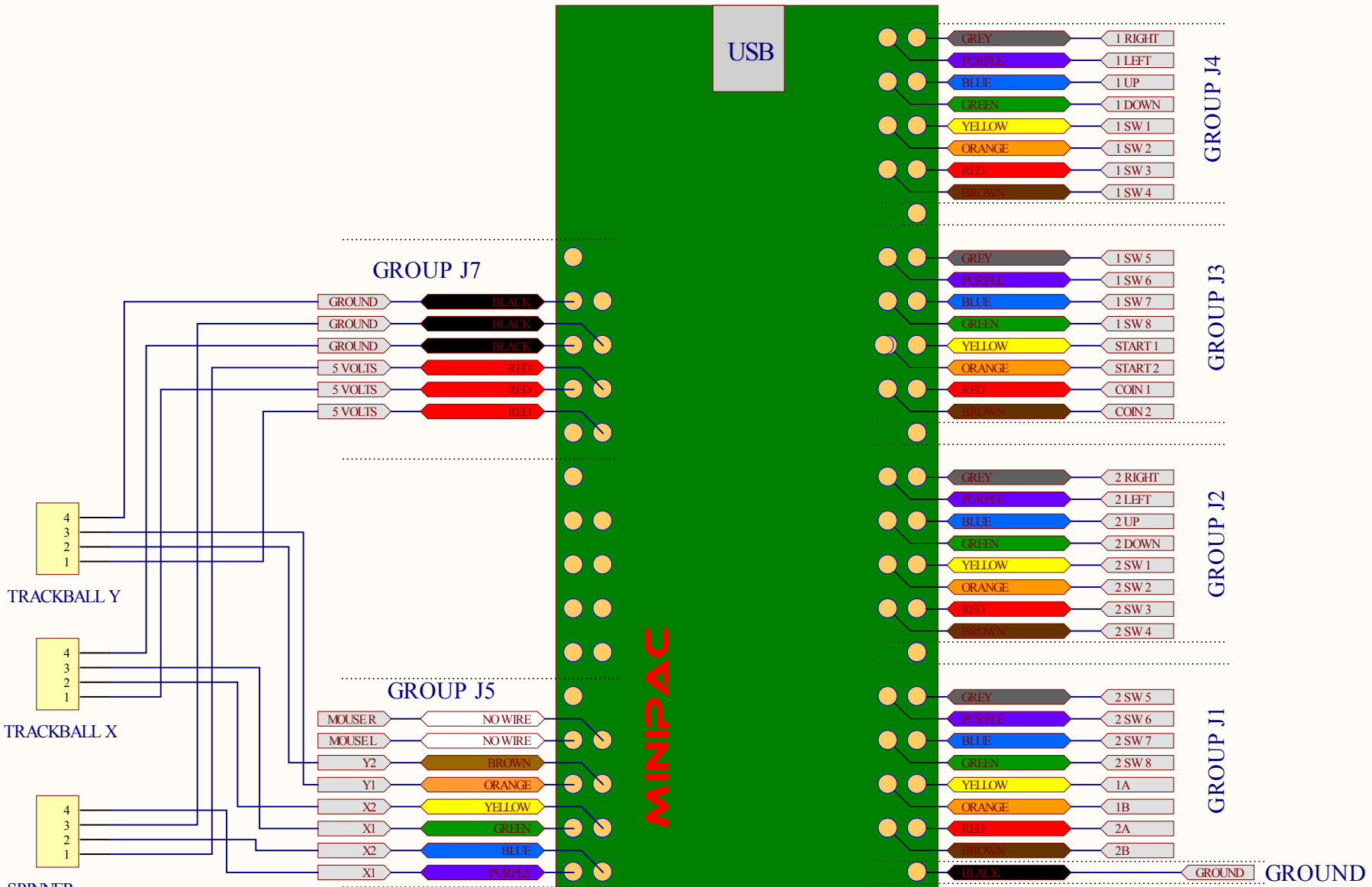
USB
MINPAC
GROUP J7
GROUND BLACK
GROUND BLACK
GROUND BLACK
5 VOLTS RED
5 VOLTS RED
5 VOLTS RED
GROUP J5
MOUSE R NO WIRE
MOUSE L NO WIRE
Y2 BROWN
Y1 ORANGE
X2 YELLOW
X1 GREEN
X2 BLUE
X1 PURPLE
TRACKBALL Y
TRACKBALL X
SPINNER
4 3 2 1
GROUP J4
GREY 1 RIGHT
PURPLE 1 LEFT
BLUE 1 UP
GREEN 1 DOWN
YELLOW 1 SW 1
ORANGE 1 SW 2
RED 1 SW 3
BROWN 1 SW 4
GROUP J3
GREY 1 SW 5
PURPLE 1 SW 6
BLUE 1 SW 7
GREEN 1 SW 8
YELLOW START 1
ORANGE START 2
RED COIN 1
BROWN COIN 2
GROUP J2
GREY 2 RIGHT
PURPLE 2 LEFT
BLUE 2 UP
GREEN 2 DOWN
YELLOW 2 SW 1
ORANGE 2 SW 2
RED 2 SW 3
BROWN 2 SW 4
GROUP J1
GREY 2 SW 5
PURPLE 2 SW 6
BLUE 2 SW 7
GREEN 2 SW 8
YELLOW 1A
ORANGE 1B
RED 2A
BROWN 2B
BLACK GROUND
GROUND